Buffer (switch)

NPN

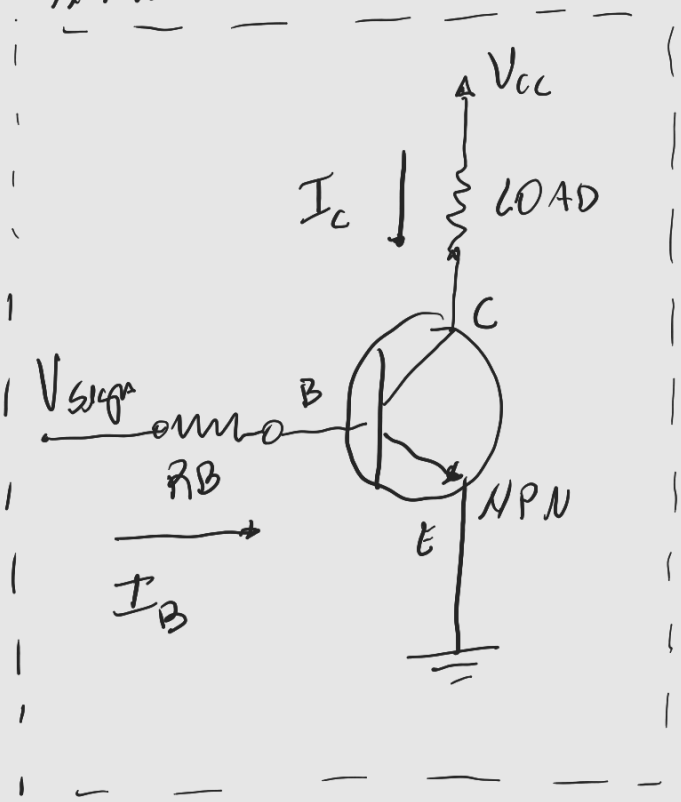

PNP

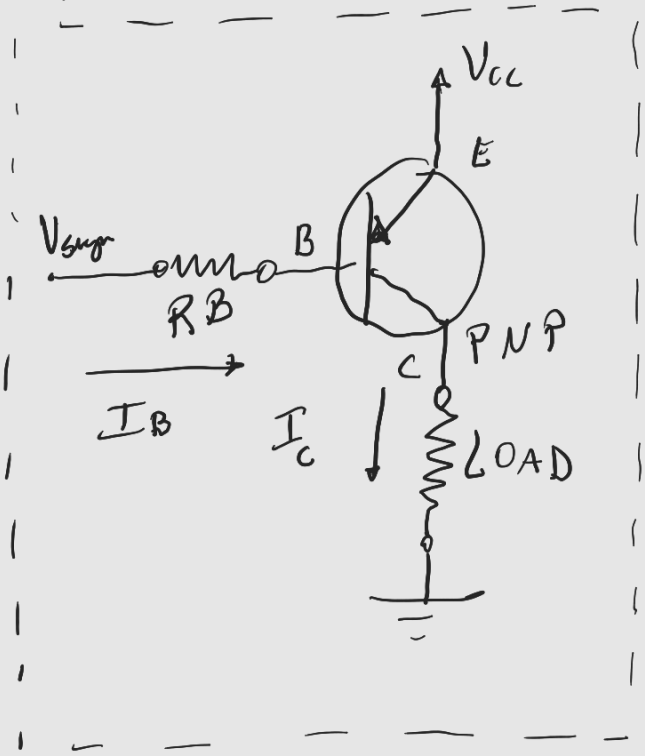

$I_{C_{max}} = 200\,mA$ / $I_B = 1\,mA$ / $V_{sign} = 5V$

$$h_{f_{min}} = \frac{I_{C_{max}}}{I_{B_{max}}} = \frac{200\,mA}{1\,mA} \Rightarrow h_{f_{min}} = 200$$

$$P_{D_{max}} = V_{CE_{sat}} \cdot I_{C_{max}} = 0.2V \cdot 0.2A = 40\,mW$$

$$RB = \frac{V_{sign} - V_{BE}}{I_{B_{max}}} = \frac{5.0 - 0.7}{1 \cdot 10^{-3}} = 4300\,\Omega = 4.3\,k\Omega$$

Porem, queremos uma saturação forte, $RB = 1k\Omega$

Buffer laser

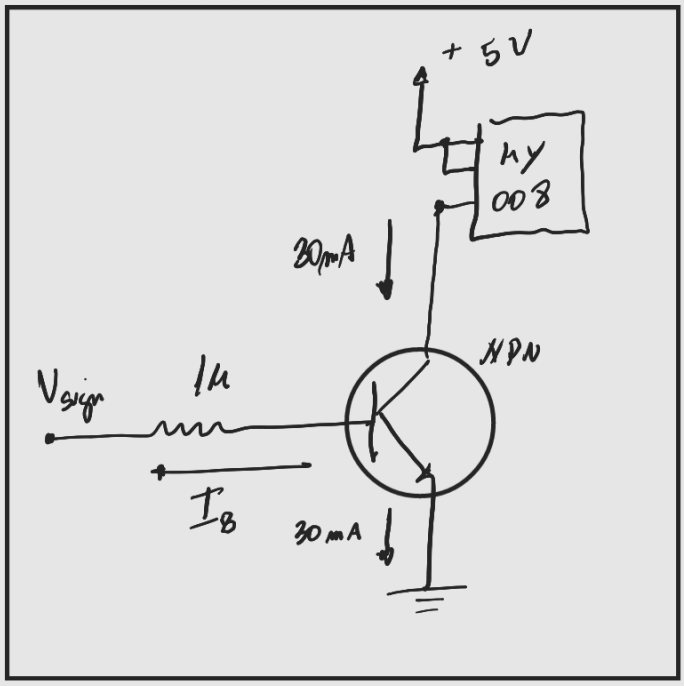

Polarization foto transistor

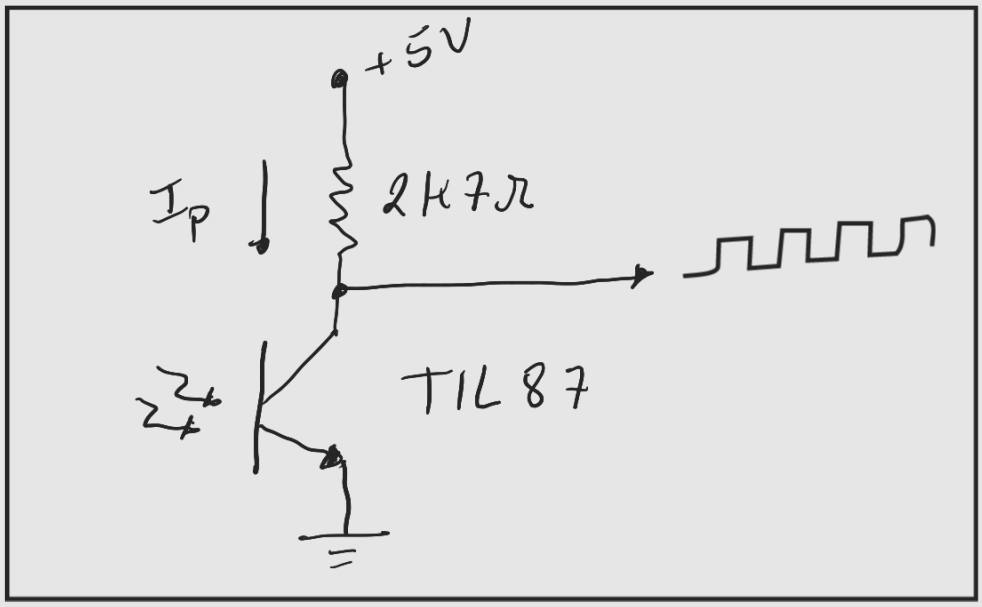

$$I_{P_{max}} = \frac{5}{2k7} = 1{,}85\,mA$$